ENGLISH: Original instructions

INSTRUCTION MANUAL

Impact Wrench

6953

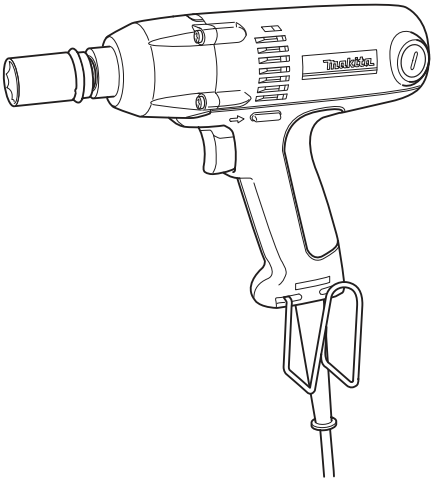

DOUBLE INSULATION

Read before use.

SPECIFICATIONS

Model		6953
Capacities	Standard bolt	M10 - M16
	High tensile bolt	M8 - M12
Square drive		12.7 mm
No load speed (min^{-1})		0 - 3,000
Impacts per minute		0 - 3,000
Max. fastening torque		150 N•m
Overall length		233 mm
Net weight		1.5 kg
Safety class		⧈/II

- Due to our continuing program of research and development, the specifications herein are subject to change without notice.
- Specifications may differ from country to country.
- Weight according to EPTA-Procedure 01/2014

Symbols

The following show the symbols used for the equipment. Be sure that you understand their meaning before use.

	Read instruction manual.
	DOUBLE INSULATION
	Only for EU countries Do not dispose of electric equipment together with household waste material! In observance of the European Directive, on Waste Electric and Electronic Equipment and its implementation in accordance with national law, electric equipment that have reached the end of their life must be collected separately and returned to an environmentally compatible recycling facility.

Intended use

The tool is intended for fastening bolts and nuts.

Power supply

The tool should be connected only to a power supply of the same voltage as indicated on the nameplate, and can only be operated on single-phase AC supply. They are double-insulated and can, therefore, also be used from sockets without earth wire.

General power tool safety warnings

⚠***WARNING:*** **Read all safety warnings, instructions, illustrations and specifications provided with this power tool.** Failure to follow all instructions listed below may result in electric shock, fire and/or serious injury.

Save all warnings and instructions for future reference.

The term "power tool" in the warnings refers to your mains-operated (corded) power tool or battery-operated (cordless) power tool.

Work area safety

1. **Keep work area clean and well lit.** Cluttered or dark areas invite accidents.
2. **Do not operate power tools in explosive atmospheres, such as in the presence of flammable liquids, gases or dust.** Power tools create sparks which may ignite the dust or fumes.
3. **Keep children and bystanders away while operating a power tool.** Distractions can cause you to lose control.

Electrical Safety

1. **Power tool plugs must match the outlet. Never modify the plug in any way. Do not use any adapter plugs with earthed (grounded) power tools.** Unmodified plugs and matching outlets will reduce risk of electric shock.
2. **Avoid body contact with earthed or grounded surfaces, such as pipes, radiators, ranges and refrigerators.** There is an increased risk of electric shock if your body is earthed or grounded.
3. **Do not expose power tools to rain or wet conditions.** Water entering a power tool will increase the risk of electric shock.
4. **Do not abuse the cord. Never use the cord for carrying, pulling or unplugging the power tool. Keep cord away from heat, oil, sharp edges or moving parts.** Damaged or entangled cords increase the risk of electric shock.
5. **When operating a power tool outdoors, use an extension cord suitable for outdoor use.** Use of a cord suitable for outdoor use reduces the risk of electric shock.
6. **If operating a power tool in a damp location is unavoidable, use a residual current device (RCD) protected supply.** Use of an RCD reduces the risk of electric shock.
7. **Use of power supply via an RCD with a rated residual current of 30 mA or less is always recommended.**
8. **Power tools can produce electromagnetic fields (EMF) that are not harmful to the user.** However, users of pacemakers and other similar medical devices should contact the maker of their device and/or doctor for advice before operating this power tool.
9. **Do not touch the power plug with wet hands.**
10. **If the cord is damaged, have it replaced by the manufacturer or his agent in order to avoid a safety hazard.**

Personal Safety

1. **Stay alert, watch what you are doing and use common sense when operating a power tool. Do not use a power tool while you are tired or under the influence of drugs, alcohol or medication.** A moment of inattention while operating power tools may result in serious personal injury.
2. **Use personal protective equipment. Always wear eye protection.** Protective equipment such as a dust mask, non-skid safety shoes, hard hat or hearing protection used for appropriate conditions will reduce personal injuries.
3. **Prevent unintentional starting. Ensure the switch is in the off-position before connecting to power source and/or battery pack, picking up or carrying the tool.** Carrying power tools with your finger on the switch or energising power tools that have the switch on invites accidents.
4. **Remove any adjusting key or wrench before turning the power tool on.** A wrench or a key left attached to a rotating part of the power tool may result in personal injury.
5. **Do not overreach. Keep proper footing and balance at all times.** This enables better control of the power tool in unexpected situations.
6. **Dress properly. Do not wear loose clothing or jewellery. Keep your hair and clothing away from moving parts.** Loose clothes, jewellery or long hair can be caught in moving parts.
7. **If devices are provided for the connection of dust extraction and collection facilities, ensure these are connected and properly used.** Use of dust collection can reduce dust-related hazards.
8. **Do not let familiarity gained from frequent use of tools allow you to become complacent and ignore tool safety principles.** A careless action can cause severe injury within a fraction of a second.
9. **Always wear protective goggles to protect your eyes from injury when using power tools. The goggles must comply with ANSI Z87.1 in the USA, EN 166 in Europe, or AS/NZS 1336 in Australia/New Zealand. In Australia/New Zealand, it is legally required to wear a face shield to protect your face, too.**

It is an employer's responsibility to enforce the use of appropriate safety protective equipments by the tool operators and by other persons in the immediate working area.

Power tool use and care

1. **Do not force the power tool. Use the correct power tool for your application.** The correct power tool will do the job better and safer at the rate for which it was designed.
2. **Do not use the power tool if the switch does not turn it on and off.** Any power tool that cannot be controlled with the switch is dangerous and must be repaired.
3. **Disconnect the plug from the power source and/or remove the battery pack, if detachable, from the power tool before making any adjustments, changing accessories, or storing power tools.** Such preventive safety measures reduce the risk of starting the power tool accidentally.
4. **Store idle power tools out of the reach of children and do not allow persons unfamiliar with the power tool or these instructions to operate the power tool.** Power tools are dangerous in the hands of untrained users.
5. **Maintain power tools and accessories. Check for misalignment or binding of moving parts, breakage of parts and any other condition that may affect the power tool's operation. If damaged, have the power tool repaired before use.** Many accidents are caused by poorly maintained power tools.
6. **Keep cutting tools sharp and clean.** Properly maintained cutting tools with sharp cutting edges are less likely to bind and are easier to control.
7. **Use the power tool, accessories and tool bits etc. in accordance with these instructions, taking into account the working conditions and the work to be performed.** Use of the power tool for operations different from those intended could result in a hazardous situation.
8. **Keep handles and grasping surfaces dry, clean and free from oil and grease.** Slippery handles and grasping surfaces do not allow for safe handling and control of the tool in unexpected situations.
9. **When using the tool, do not wear cloth work gloves which may be entangled.** The entanglement of cloth work gloves in the moving parts may result in personal injury.

Service

1. **Have your power tool serviced by a qualified repair person using only identical replacement parts.** This will ensure that the safety of the power tool is maintained.
2. **Follow instruction for lubricating and changing accessories.**

Impact wrench safety warnings

1. **Hold the power tool by insulated gripping surfaces, when performing an operation where the fastener may contact hidden wiring or its own cord.** Fasteners contacting a "live" wire may make exposed metal parts of the power tool "live" and could give the operator an electric shock.
2. **Wear ear protectors.**
3. **Check the impact socket carefully for wear, cracks or damage before installation.**
4. **Hold the tool firmly.**
5. **Keep hands away from rotating parts.**
6. **Always be sure you have a firm footing. Be sure no one is below when using the tool in high locations.**
7. **The proper fastening torque may differ depending upon the kind or size of the bolt. Check the torque with a torque wrench.**

SAVE THESE INSTRUCTIONS.

⚠WARNING: DO NOT let comfort or familiarity with product (gained from repeated use) replace strict adherence to safety rules for the subject product.

MISUSE or failure to follow the safety rules stated in this instruction manual may cause serious personal injury.

FUNCTIONAL DESCRIPTION

⚠CAUTION:

- Always be sure that the tool is switched off and unplugged before adjusting or checking function on the tool.

Switch action

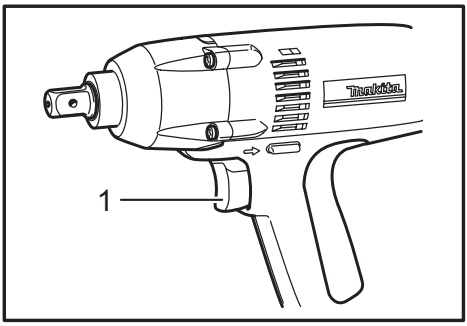

► **1.** Switch trigger

⚠CAUTION:

- Before plugging in the tool, always check to see that the switch trigger actuates properly and returns to the "OFF" position when released.

To start the tool, simply pull the switch trigger. Tool speed is increased by increasing pressure on the switch trigger. Release the switch trigger to stop.

Reversing switch action

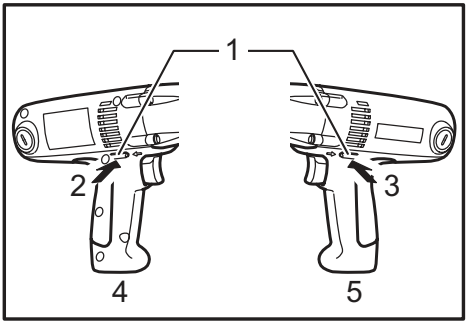

► **1.** Reversing switch lever **2.** A side **3.** B side **4.** Clockwise **5.** Counterclockwise

This tool has a reversing switch to change the direction of rotation. Depress the reversing switch lever from the A side for clockwise rotation or from the B side for counterclockwise rotation.

⚠CAUTION:

- Always check the direction of rotation before operation.
- Use the reversing switch only after the tool comes to a complete stop. Changing the direction of rotation before the tool stops may damage the tool.

ASSEMBLY

⚠CAUTION:

- Always be sure that the tool is switched off and unplugged before carrying out any work on the tool.

Selecting correct socket

Always use the correct size socket for bolts and nuts. An incorrect size socket will result in inaccurate and inconsistent fastening torque and/or damage to the bolt or nut.

Installing or removing socket

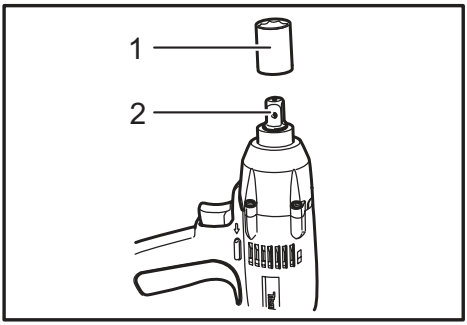

► **1.** Socket **2.** Anvil

1. For socket without O-ring and pin
   To install the socket, push it onto the anvil of the tool until it locks into place.
   To remove the socket, simply pull it off.

2. For socket with O-ring and pin

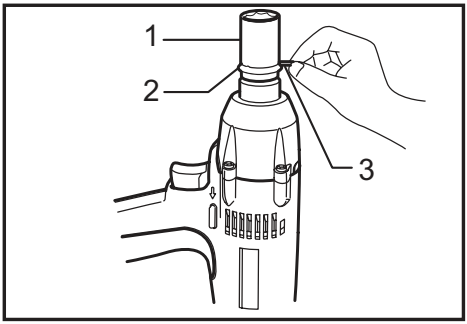

► **1.** Socket **2.** O-ring **3.** Pin

Move the O-ring out of the groove in the socket and remove the pin from the socket. Fit the socket onto the anvil of the tool so that the hole in the socket is aligned with the hole in the anvil. Insert the pin through the hole in the socket and anvil. Then return the O-ring to the original position in the socket groove to retain the pin. To remove the socket, follow the installation procedures in reverse.

Installing and removing hook

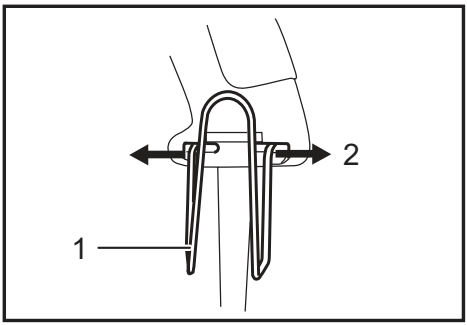

► **1.** Hook **2.** Expand

The hook is convenient for temporarily hanging the tool. This can be removed without using a tool. This can be installed on either side of the tool.
Expand the upper part of the hook in both directions and remove it. To install the hook, follow the removal procedure in reverse.

OPERATION

Holding the tool

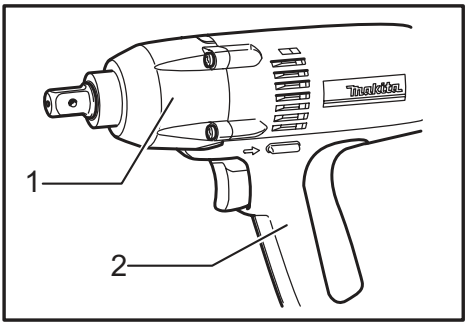

► **1.** Metal part **2.** Handle

Hold the tool only by the handle when performing an operation. Do not touch the metal part.
The proper fastening torque may differ depending upon the kind or size of the bolt, the material of the workpiece to be fastened, etc. The relation between fastening torque and fastening time is shown in the figures.

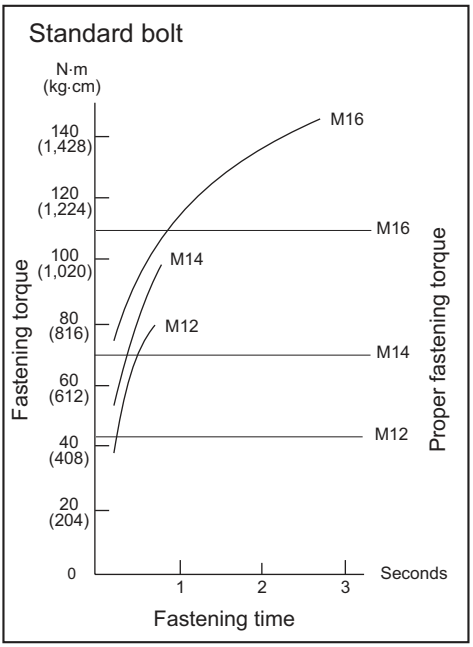

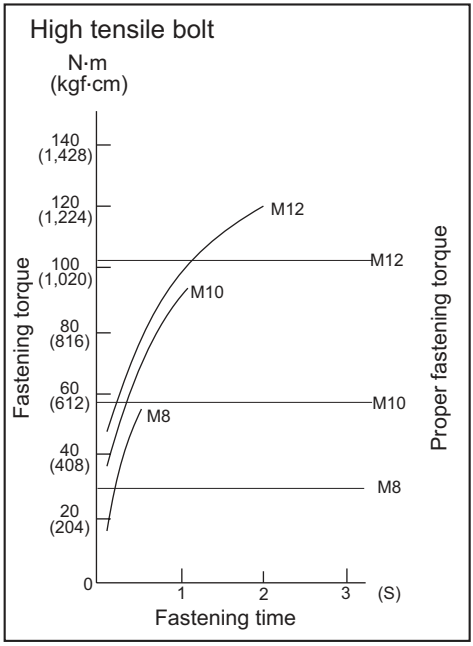

Hold the tool firmly and place the socket over the bolt or nut. Turn the tool on and fasten for the proper fastening time.

NOTE:
- When fastening screw M8 or smaller, carefully adjust pressure on the switch trigger so that the screw is not damaged.
- Hold the tool pointed straight at the bolt or nut without applying excessive pressure on the tool.
- Excessive fastening torque may damage the bolt/nut or socket. Before starting your job, always perform a test operation to determine the proper fastening time for your bolt or nut. Especially for the bolt smaller than M8, perform the above test operation to prevent the trouble on socket or bolt, etc.

The fastening torque is affected by a wide variety of factors including the following. After fastening, always check the torque with a torque wrench.

1. Voltage
   Voltage drop will cause a reduction in the fastening torque.
2. Socket
   - Failure to use the correct size socket will cause a reduction in the fastening torque.
   - A worn socket (wear on the hex end or square end) will cause a reduction in the fastening torque.
3. Bolt
   - Even though the torque coefficient and the class of bolt are the same, the proper fastening torque will differ according to the diameter of bolt.
   - Even though the diameters of bolts are the same, the proper fastening torque will differ according to the torque coefficient, the class of bolt and the bolt length.
4. The use of the universal joint or the extension bar somewhat reduces the fastening force of the impact wrench. Compensate by fastening for a longer period of time.
5. The manner of holding the tool or the material of driving position to be fastened will affect the torque.
6. Operating the tool at low speed will cause a reduction in the fastening torque.

MAINTENANCE

⚠CAUTION:
- Always be sure that the tool is switched off and unplugged before attempting to perform inspection or maintenance.
- Never use gasoline, benzine, thinner, alcohol or the like. Discoloration, deformation or cracks may result.

Replacing carbon brushes

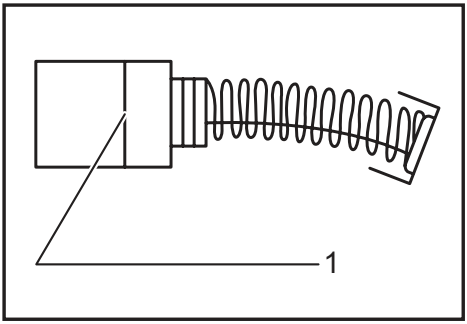

► **1.** Limit mark

Remove and check the carbon brushes regularly. Replace when they wear down to the limit mark. Keep the carbon brushes clean and free to slip in the holders. Both carbon brushes should be replaced at the same time. Use only identical carbon brushes.

Use a screwdriver to remove the brush holder caps. Take out the worn carbon brushes, insert the new ones and secure the brush holder caps.

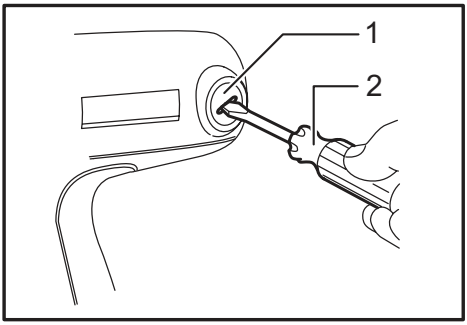

► **1.** Brush holder cap **2.** Screwdriver

To maintain product SAFETY and RELIABILITY, repairs, any other maintenance or adjustment should be performed by Makita Authorized Service Centers, always using Makita replacement parts.

OPTIONAL ACCESSORIES

⚠CAUTION:

- These accessories or attachments are recommended for use with your Makita tool specified in this manual. The use of any other accessories or attachments might present a risk of injury to persons. Only use accessory or attachment for its stated purpose.

If you need any assistance for more details regarding these accessories, ask your local Makita Service Center.

- Sockets
- Extension bar
- Universal joint
- Bit adapter
- Phillips bits

NOTE:

- Some items in the list may be included in the tool package as standard accessories. They may differ from country to country.

Makita Corporation

www.makita.com

884372B9
EN
20171215